MXR Distortion +

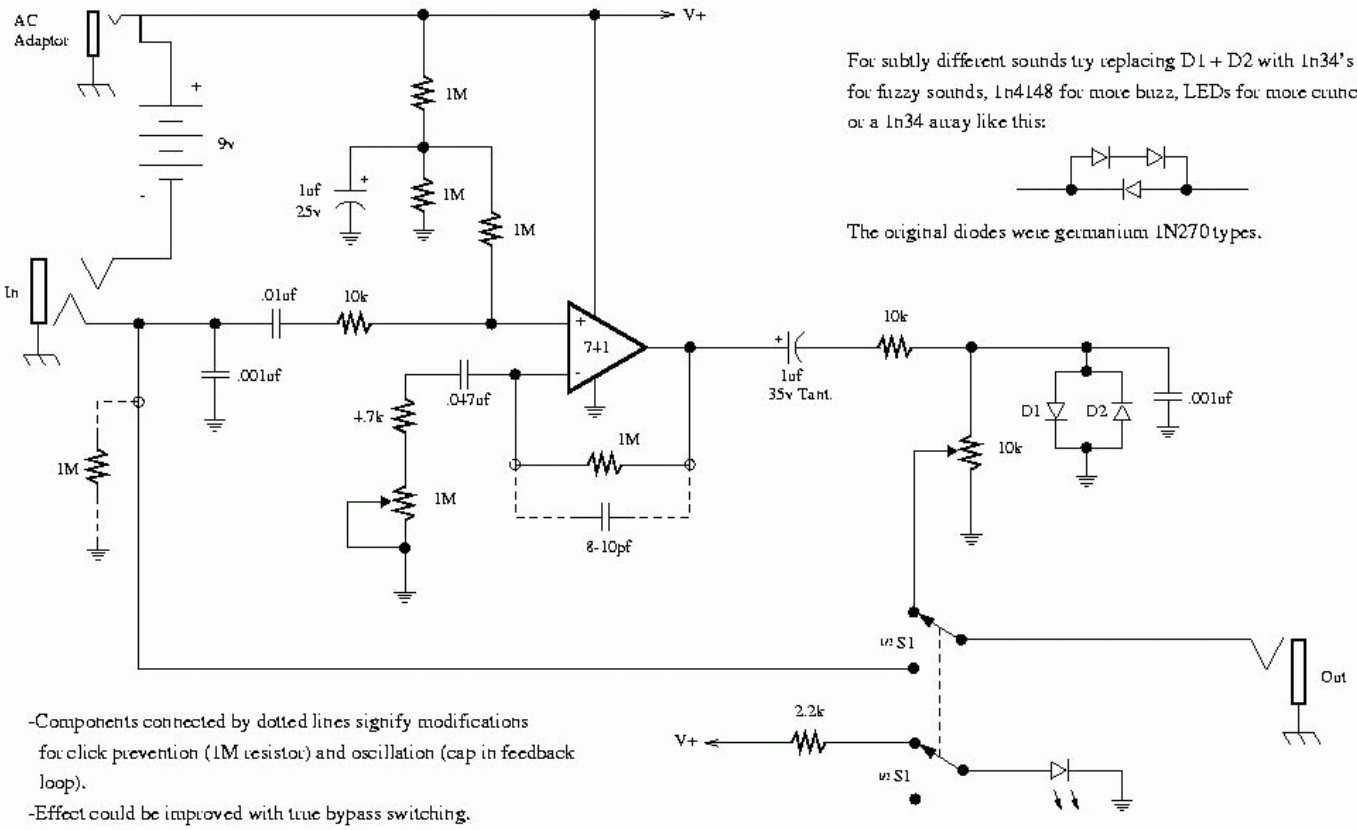

For subtly different sounds try replacing D1 + D2 with 1n34's for fuzzy sounds, 1n4148 for more buzz, LEDs for more crunch, or a 1n34 array like this:

The original diodes were germanium 1N270 types.

-Components connected by dotted lines signify modifications for click prevention (1M resistor) and oscillation (cap in feedback loop).

-Effect could be improved with true bypass switching.